Name	Notes
Location	
Serial Number	

Save

Print Sheet

CKM12 Info

Reset Values

CKM12

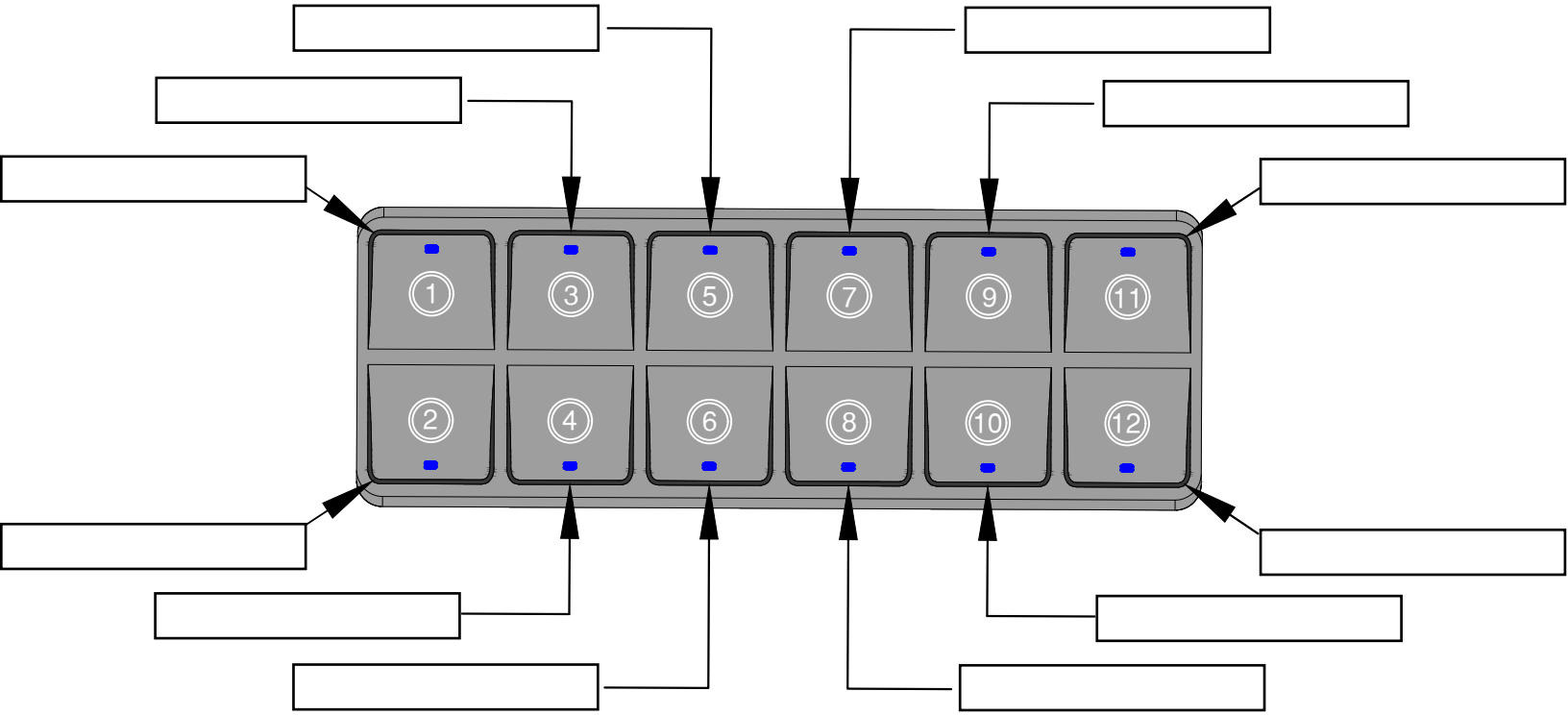

Special Operation Description (Modes)

Page / Print Size: A (8 1/2" x 11")