Instance 50	Notes
Location	
Serial Number	

Save

Print Sheet

VMM6 (7 Pos.)

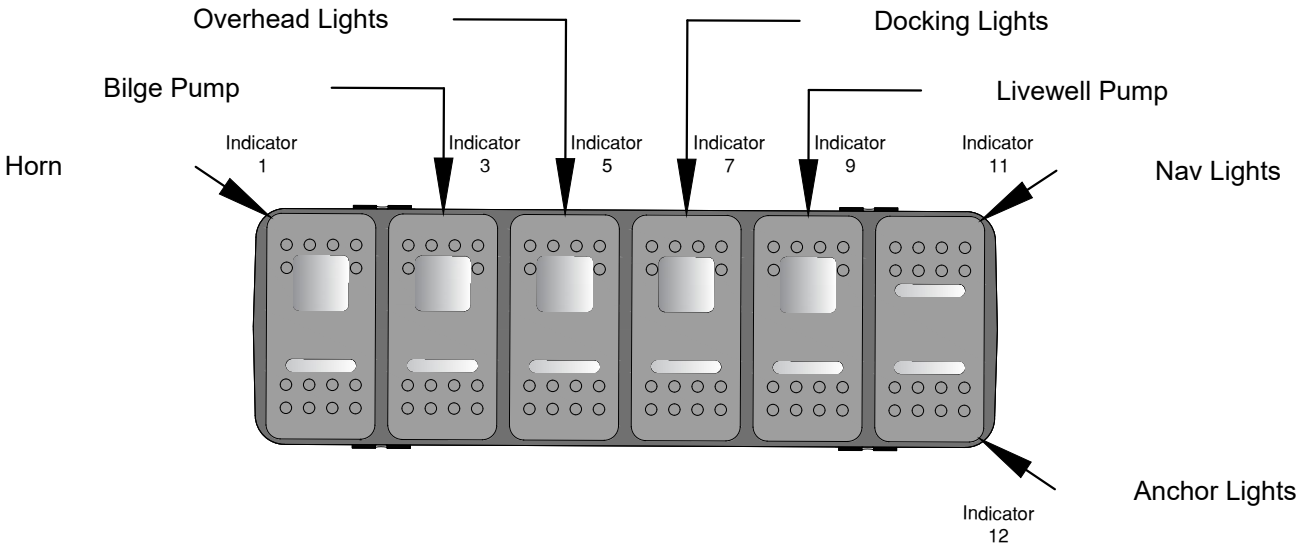

Special Operation Description (Modes)